NucleOSS™

T6 torq

NucleOSS Dental Implant System

SURGICAL GUIDE

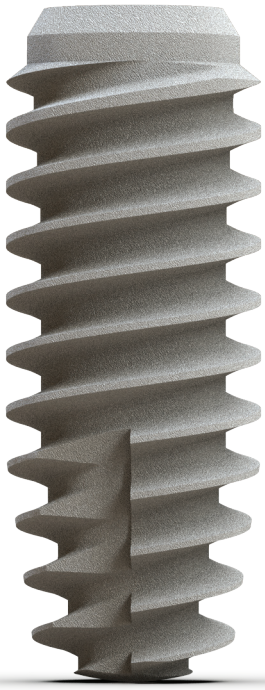

This manual contains recommended instructions for use for surgical applications of the NucleOSS Dental Implant system. Treatment and surgical planning should be based on clinical data and the physician's evaluation of the case.

FEBRUARY 2024 EN

Dear Clinician

Şanlılar Ltd.Şti., the manufacturer of the NucleOSS brand, was established in Izmir in 2001 and produced Turkey's first dental implant. In the light of meticulous R&D studies and knowledge, we continue to produce more innovative and user-friendly products for you with the excitement of the first day, by adopting world-class sensitive production protocols. In order to increase the quality of the operation and to enable more comfortable treatment processes, we design and develop quality and innovative products, and offer them to you.

We established the TFI (Together for Implantology) academy in order to create a platform where dentists can share their ideas, studies and information about implants within an ethical framework and thus contribute to the development of the field of implantology. As NucleOSS, we adopt reliable, quality and customer-oriented production with transparent, ethical and principled management.

We work more and more every day within the framework of our open to change and innovative approach, which is the first condition of progress and growth. We design new products, constantly change and develop with our understanding of management and production that values people.

We are growing thanks to your support... We are enchanting...

Salih ŞANLI

Kurucu Başkan

Contents

NucleOSS™

Topics	Page No.
T6TorQ Implant - The Recital Begins	3
Features of the NucleOSS T6 TorQ Implant	4
Diameter and Length Options	5
Pre-Operational Procedures	6
Drill Protocol for T6 TorQ Implants	7
Drill Protocol for T6 TorQ Implants (L 6.5 mm)	9
Package Content	10
Transfer and Tightening of The Implants	11
Technical Specifications of T6 TorQ Surgical Kit	12
T6 TorQ Surgical Kit	13
Initials Drills	14
Pilot and Final Drills	15
Hard Bone and Countersink Drills	16
T6 TorQ - Drill Compatibility	17
T6 TorQ - Drill Compatibility (L 6.5 mm)	18
Pilot Paralel Pins	19
Angled Pins (17° - 30°)	20
Bone Profiler Drill	21
T6 Implant Transfer and Tightening Parts	22
Hex Drivers	23
Ball(O-ring) and Screw-Retained Tightening Parts	24
Slimex Implant Carrying/Tightening Parts	25
Depth Gauge - Screw Driver - Ratchet	26
Tightening - Torque Values	27
NucleOSS Dental Implant System - Implant Prospectus	29
Notes	32

NucleOSS™

T6 torq

Your new solution partner for immediate and early laoding in all bone

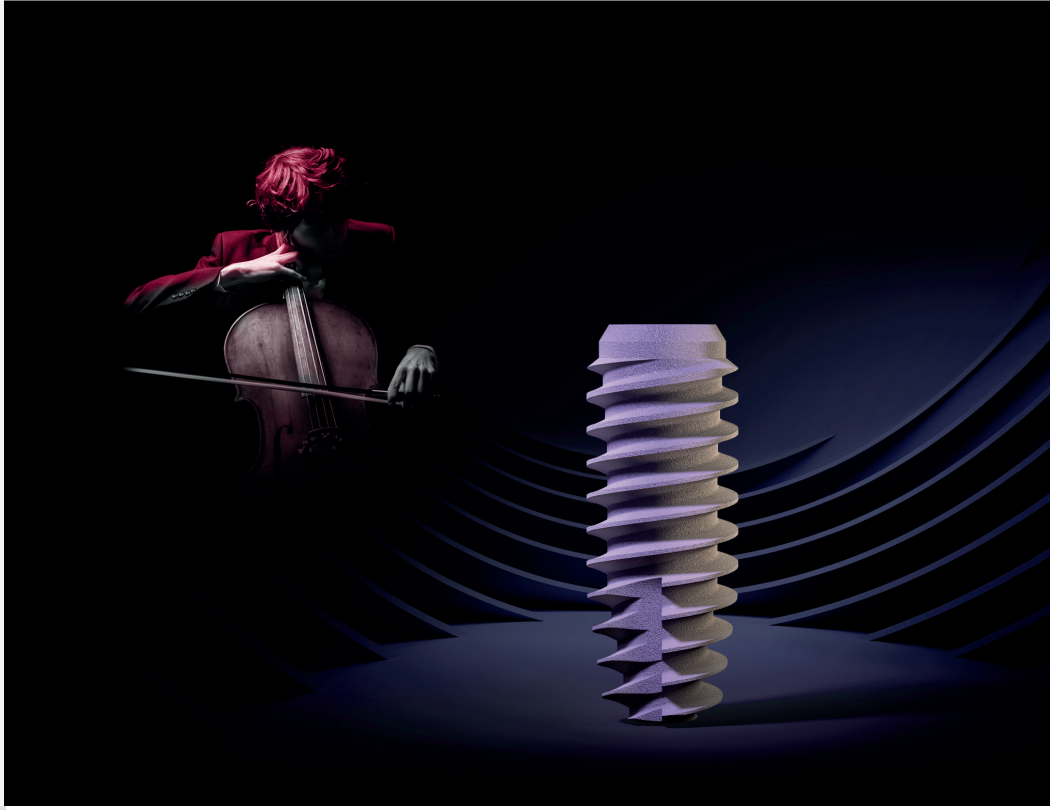

Bone Level Implant

the recital **begins**

Common Superstructures

Offers solutions for all indications with a wide range of superstructure options...

Common connection for all T6 implant diameters....

NucleOSS offers the T6 torq implant, specially developed with 20 years of R&D experience and the support of specialist physicians for immediate and early loading to the use of physicians. T6 Torq implant provides a strong mechanical attachment to the bone tissue thanks to its incisive and deep tooth profile

It provides high ISQ values required for immediate and early loading in all bone types. Thanks to its common internal structure, it maintains its proven strength with the T6 Standard implant and uses all T6 superstructures in common.

In addition, the approved Maxicell surface offers safe and high survival rate on T6 torq implants. Our unique surgical set meets all the needs of our physicians and supports the surgical and prosthetic processes in a sensitive, comfortable and trouble-free manner.

- Cemented Solutions

- Threaded Solutions

- Overdenture Prosthesis Solutions

- Customized Solutions

- Digital CAD-CAM Solutions

- Temporary Parts (PEEK+Titanium)

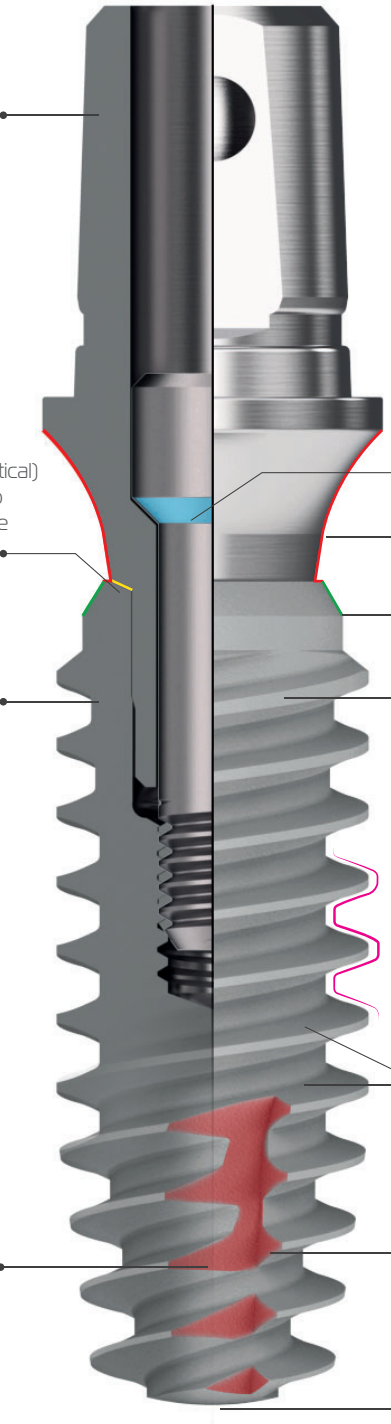

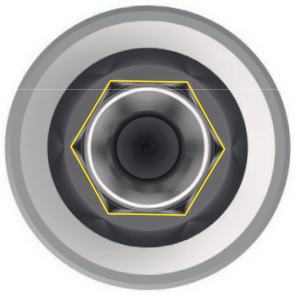

Thanks to their hexagonal internal connection, dual component NucleOSS implants allow the superstructures to be placed in 6 different indexes with 60˚ rotation.

Diameter and Length Options

Ø 3.5

Implant Cap	>	T6 32150
Lenght		**Product Code**
8 mm	>	TRQ 3508
10 mm	>	TRQ 3510
12 mm	>	TRQ 3512
14 mm	>	TRQ 3514
17 mm	>	TRQ 3517

Ø 5.0

Implant Cap	>	T6 32151
Lenght		**Product Code**
6.5 mm	>	TRQ 5006S
8 mm	>	TRQ 5008
10 mm	>	TRQ 5010
12 mm	>	TRQ 5012
14 mm	>	TRQ 5014
17 mm	>	TRQ 5017

Ø 4.0

Implant Cap	>	T6 32158
Lenght		**Product Code**
6.5 mm	>	TRQ 4006S
8 mm	>	TRQ 4008
10 mm	>	TRQ 4010
12 mm	>	TRQ 4012
14 mm	>	TRQ 4014
17 mm	>	TRQ 4017

Ø 6.0

Implant Cap	>	T6 32152
Lenght		**Product Code**
6.5 mm	>	TRQ 6006S
8 mm	>	TRQ 6008
10 mm	>	TRQ 6010
12 mm	>	TRQ 6012

Ø 4.5

Implant Cap	>	T6 32157
Lenght		**Product Code**
6.5 mm	>	TRQ 4506S
8 mm	>	TRQ 4508
10 mm	>	TRQ 4510
12 mm	>	TRQ 4512
14 mm	>	TRQ 4514
17 mm	>	TRQ 4517

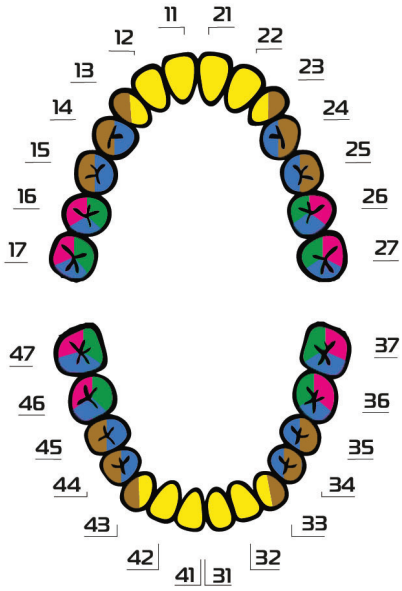

Diameter & Length Selection Suggestions

The figure on the right shows the recommended areas of use according to the diameters of the T6 Bone Level Implant. In order to determine the treatment and select the implant, clinician should evaluate the patient, the case, and the intended final restoration prior to surgery. Using outside the specified areas is at the clinician's discretion and responsibility.

Pre-Operational Procedures

Pre-Operational Examination

General evaluation of the patient should be made with clinical and oral radiographic tests, and mucous membrane, jaw morphology, dental history, prosthetic history and oral dysfunctional signs should be carefully examined before the operation. Radiographic analyzes should be used in the examination of bone topography.

In addition to clinical examination, preliminary radiographic evaluations are a basis for determining the patient's suitability for implant treatment.

If the patient is found suitable for treatment, a more detailed clinical examination should be performed for the treatment area and the countervailing area. Any pathological condition detected in the jaw should be treated before the implant operation.

Pre-Operation Planning

While performing the planning before the operation, the final prosthetic treatment should be considered and planning should be done accordingly. First of all, the intended final prosthetic treatment should be planned, and the type and number of implants should be decided accordingly. The prosthetic material to be used should be chosed according to the region where the implant will be placed. While planning the treatment, all stages from the healing process to the final restoration should be evaluated with the intended final treatment in mind

Articulator-mounted models provide information about the connection between the tooth and the jaw. Wax modeling from the edentulous area makes an important contribution to correct planning. The most appropriate treatment planning can be achieved by examining the occlusal picture and evaluating factors such as load distribution and preferred slots for implants.

The Transparent Radiographic Implant Guide, showing the magnified dimensions of the implants at different rates, will contribute to the most appropriate selection of the point, direction and length of implant.

During the surgical operation, factors such as the primary stability of the implant, single-stage or two-stage surgery, immediate implant placement after extraction, and expected recovery time before loading should be considered as well as the intended final treatment approach.

The recommended healing period before loading is 12 weeks, unless there is a different medical decision taken by the physician.

In each case, the loading time for each implant should be determined by the clinician by carefully examining bone quality, quantity, density, primary stability, restoration style, and loading conditions.

Before starting the treatment, hole process should be clearly explained to the patient by specifying the results of the examination performed before the operation, the required treatment method, the expected result after the treatment, the required care and possible risks.

Bone Classification

Since the thickness and density of the bones of every patient vary, implant placement and surgery also varies for each case. According to the case data identified at the examination, the appropriate route should be followed for loading and implant surgery. Therefore, the NucleOSS surgical set and protocol were prepared taking into account these functional needs.

D1

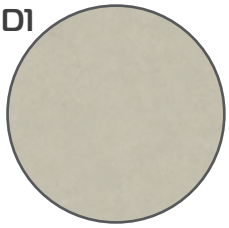

Dense cortical
Anterior Mandible

D2

Porous cortical and thick trabecular
Anterior Mandible Posterior
Mandible Anterior Maxilla

D3

Porous cortical and (thin)
tight trabecular
Anterior Maxilla
Posterior Mandible
Posterior Maxilla

D4

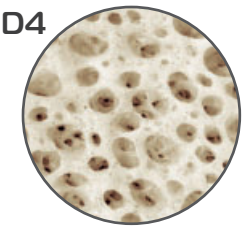

Tight trabecular
Posterior Maxilla

The NucleOSS Dental Implant System has been developed considering the natural oral anatomy and the intended final prosthetic restoration.

Positions of implants are recommended based on crown-implant compatibility. However, while deciding on the placement of the implant, the size and shape of the implant, soft tissue healing, support required for the intended final restoration, bone volume, and connection to the neighbor tooth should be considered.

Based on mechanical considerations, it is always recommended to use the largest diameter implant possible. This recommendation should be especially taken into account for the rear areas where the loading forces are higher. In all cases, loading conditions and the intended final prosthetic restoration should be considered when planning implant surgery and determining the number of implants.

Drill Protocol for T6 TorQ Implants

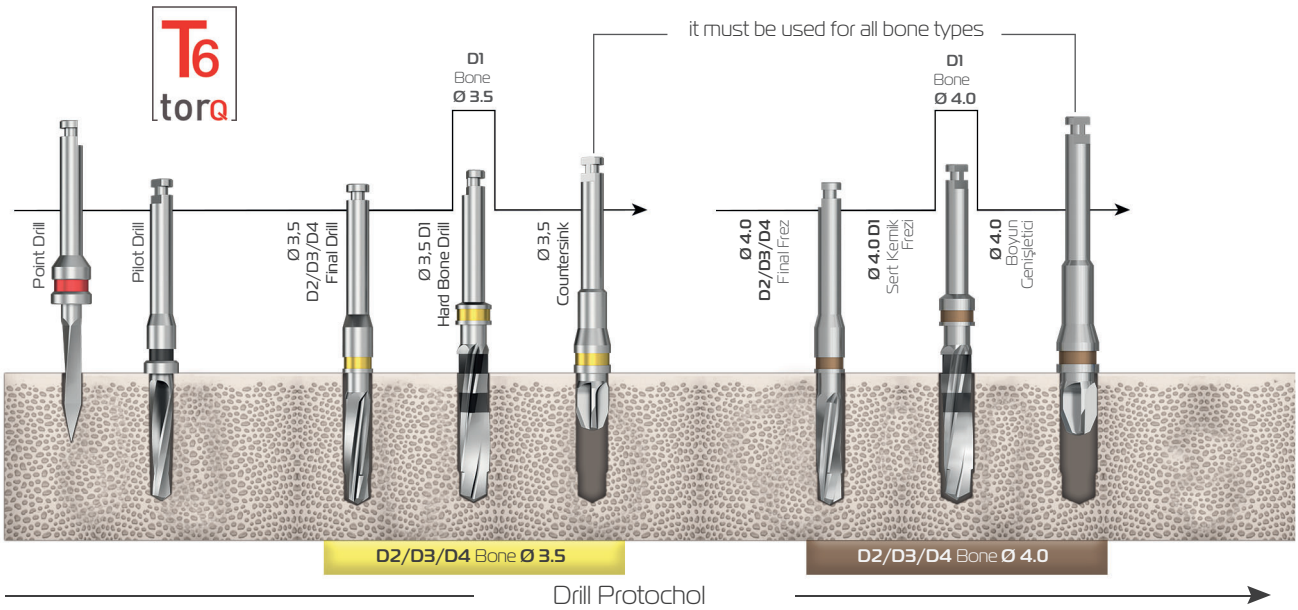

Preparation of the Implant Socket

Step 1 : After planning the T6 torq implant or implants to be used in the patient's mouth, drilling is performed with a point drill to mark or to determine the drill slot axis.

Caution : The point drill makes a slot with a length of 14 mm and a diameter of Ø 2.10 mm.

Step 2 : Pilot drills are designed with stoppers for each implant size. The use of pilot burs in accordance with the implant size in the milling protocol provides a controlled surgery by preventing the other burs from going deeper.

Step 3 : The position and axis are checked and the drill protocol is continued according to the suitable socket implant diameter. Final drills are equipped with stoppers for all sizes.

The slot is opened up to the stopper by selecting the final bur suitable for the size of the implant to be slotted. The slot is gradually enlarged using the previous diameter drill until the final diameter of the selected implant is reached.

*According to the bone density (in D1/D2 type bones), the slot is enlarged with a hard bone drill.

Caution: The hard bone drill is used to expand the slot after the standard final drill, using it as a final just after the previous diameter drill may damage the bone and the drill.

Finally, the slot preparation is completed by using a countersink drill to prevent jamming in the neck area.

Burs should be operated with coolant at a maximum of 800 rpm.

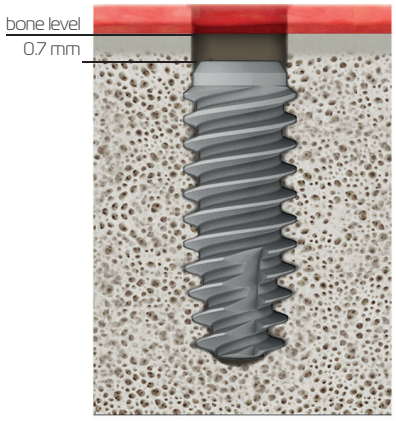

The depth of the socket opened by the surgical bur in the bone is 0.7 mm longer than the implant length to increase healthy bone formation in the neck area

Note: For T6 standard short (L:6.5 mm) implants only, this depth is 0.5 mm longer than the implant length

Bone level should be considered in surgical planning and practice.

Drill Protocol for T6 TorQ Implants

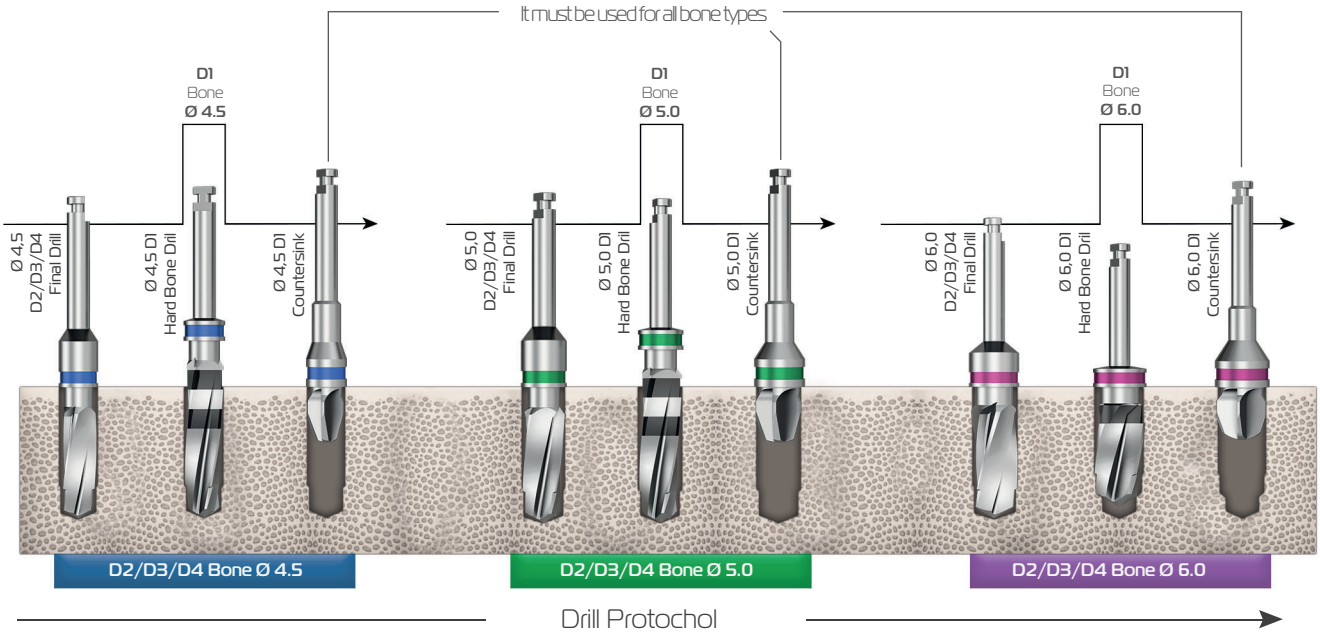

Drill Protocol for T6 TorQ Implants (for L 6.5 mm implants)

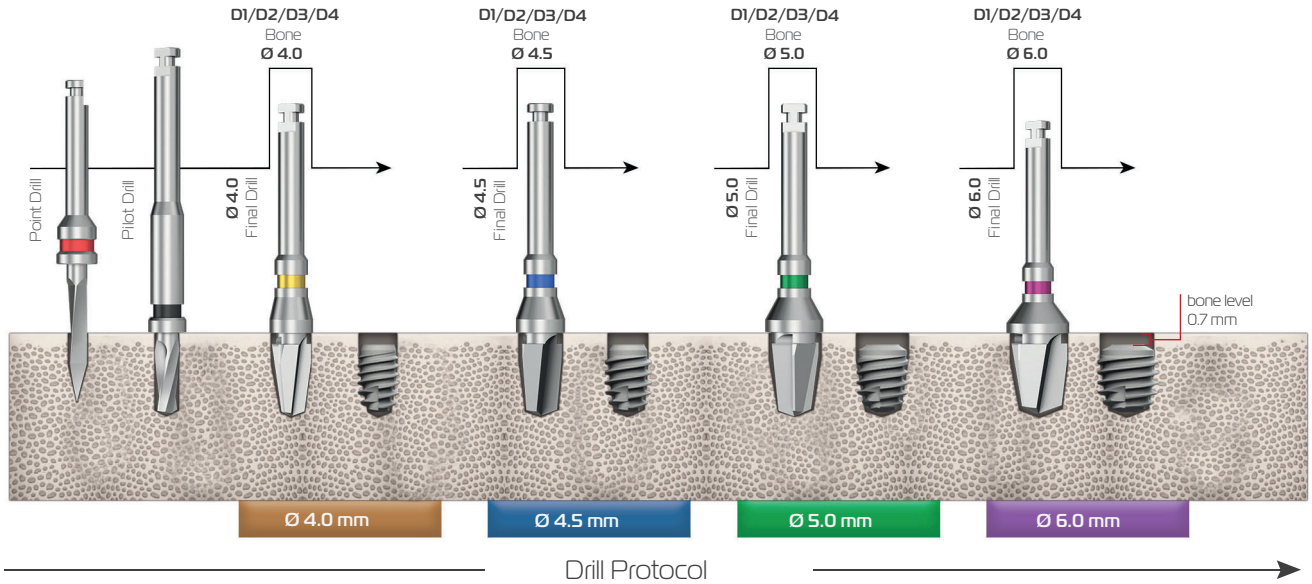

Preparation of the Implant Socket

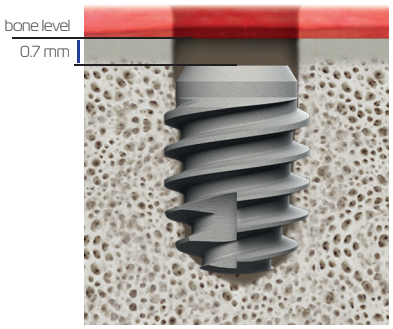

Step 1 : After planning the T6 torq 6.5 mm implant or implants, drilling is performed with a point bur to mark and determine the drill slot axis.

Caution : The point drill makes a slot with a length of 14 mm and a diameter of Ø 2.10 mm.

Step 2 : The final drills for T6 Standard 6.5 mm implants are the 6.5 mm short implant drills included in the T6 Standard surgical set. The drills are with stoppers and there are separate drills for each implant diameter.

The slot is gradually enlarged by using other diameter burs and the preparation is completed until the final diameter of the selected implant is reached in the slot opened with a point drill.

The drills should be operated with coolant at a maximum of 800 rpm.

Package Content

The NucleOSS T6 TorQ implants are supplied in a sealed sterile tyvek tube with the implant cap.

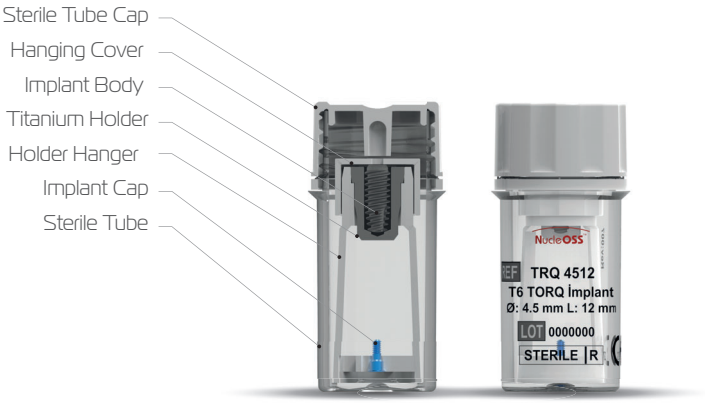

The tube cover is opened and the holder hanger is placed on the sterile cover with the help of sterile gloves

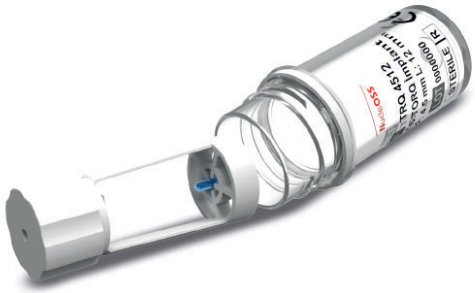

The carrier cover is held upwards with the help of the thumb and forefinger, turned slowly with the help of the thumb and forefinger of the other hand and pulled upwards.

⚠ Caution!

Once the carrier's cover is opened, the implant is released, therefore the carrier bowl should never be tilted more than 60°. Otherwise, the implant may come off and fall.

Transfer and Tightening of The Implants

T6 Implant Transfer and Tightening Parts

One of the following T6 carrying/tightening parts is used to transfer the implant from the sterile tube to the surgical site and place the implant.

Ratchet, motor or screwdriver are used in implant carrying/tightening process.

The carrying-clamping piece must fit into the implant in the exact and correct position. Otherwise, the implant may fall or damage the hex structure of the implant, as the carrying part cannot provide sufficient contact.

Before implanting, it should be checked whether the red silicone on the insert tip is in place. If the silicone is lost or damaged, it should be replaced with the spare silicone supplied in the surgical set.

The T6 implant removed from the carrier should be placed in the implant socket opened according to the protocol in the patient's mouth as soon as possible without being touched anything.

While the T6 implant is placed with a micro motor at a maximum speed of 15 rpm or with a manual hex wrench, it is placed by being turned clockwise so that the upper surface of the implant is 0.7 mm below the bone level.

By applying pressure on the carrier/tightening part during insertion, the part should be prevented from coming out of the hex socket.

Contribution of the Position of the Implant in the Socket to the Impression Process

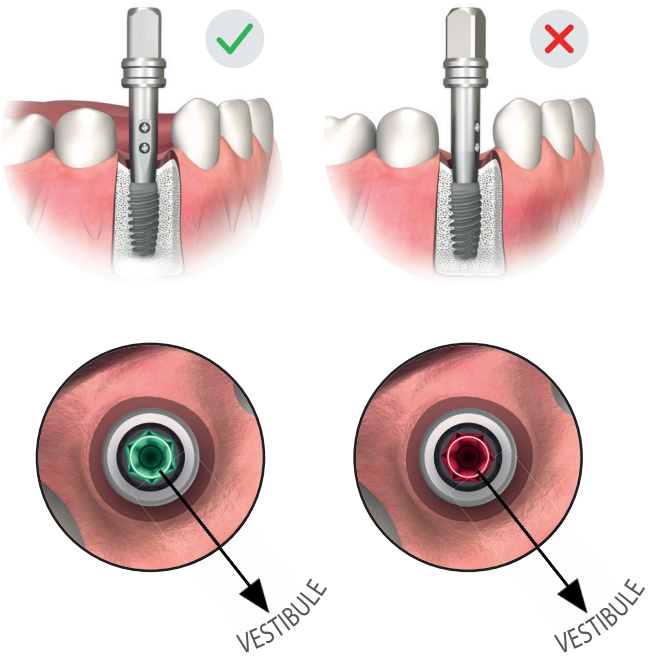

In order for standard abutments to be positioned correctly, the dots of the carrying and tightening part must face the vestibule direction of the teeth when placing T6 implants. Thus, the flat surface of the Hex structure will be in the vestibule direction of the teeth.

In addition, it is used to determine the angle direction in angled abutments. Implant hex direction is important because the hex flat surface faces the angle axis.

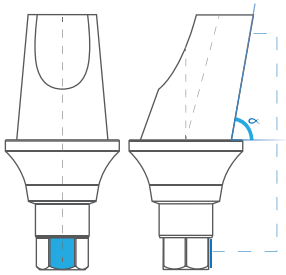

The angled axis point out the flat of Hex connection structure.

If the dots on the carrying and tightening parts are not taken into consideration, the Hex plane of the implant will face the mesial or distal direction of the teeth, and will cause the standard abutment to be positioned incorrectly.

Technical Specifications of T6 TorQ Surgical Kit

Dimensions

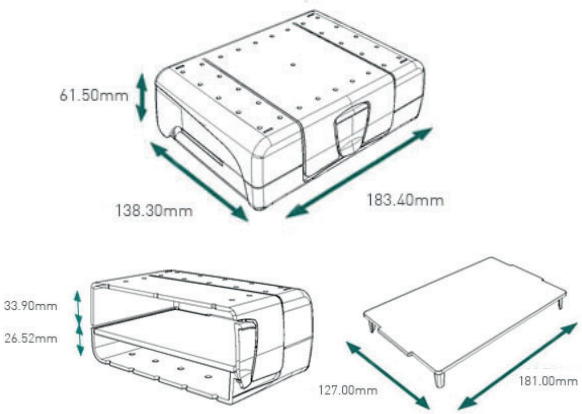

Opening Positions

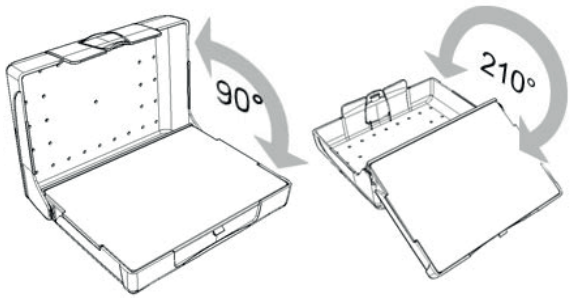

T6 TorQ Surgical Kit

NucleOSS surgical sets are designed in direct collaboration with healthcare practitioners, giving you the best possible match between the ergonomic design of the surgical tray, the surgical instruments it contains and its size.

The surgical set cover can be removed with one easy move.

Lightweight, easy to use, stackable, compact and roomy. It is easy to carry and guarantees the safety of the tools it contains, prevents them from being misplaced during transport.

The surgical set is made of highly impact resistant plastic materials suitable for autoclave sterilization. Plastic raw material can withstand more than 1000 cycles of steam sterilization.

T6 surgical sets consists of two parts, a movable middle shelf where surgical burs and tightening parts are located, and a lower section where torque ratchet and other hand tools are located.

Thanks to its compact and convenient design, it can be sterilized as one piece without having to be taken the parts inside out of the box in clinical autoclave devices.

Surgical sets are suitable for autoclave sterilization in the B134°C Prion (134°C/2.15 Bar/18 min) cycle.

Set cover can be used in two different positions by being opened 90° or 210°. When the cover is closed, the parts inside are locked automatically.

Surgical kit consists of burs, parallel pins, neck expanders, hex wrenches and hand tools.

Thanks to the flat and embedded type of silicones holding the surgical parts, they are dirt-proof and easy to clean.

Surgical burs are made of high-quality stainless steel, and after heat treatment, they have a long-lasting cutting edge with sharpening techniques.

At the bottom of T6 surgical sets, there are depth gauge, a ratchet and a screwdriver.

T0 25312
Depth Gauge

T0 25900
Torque Ratchet

T0 2022
Screwdriver

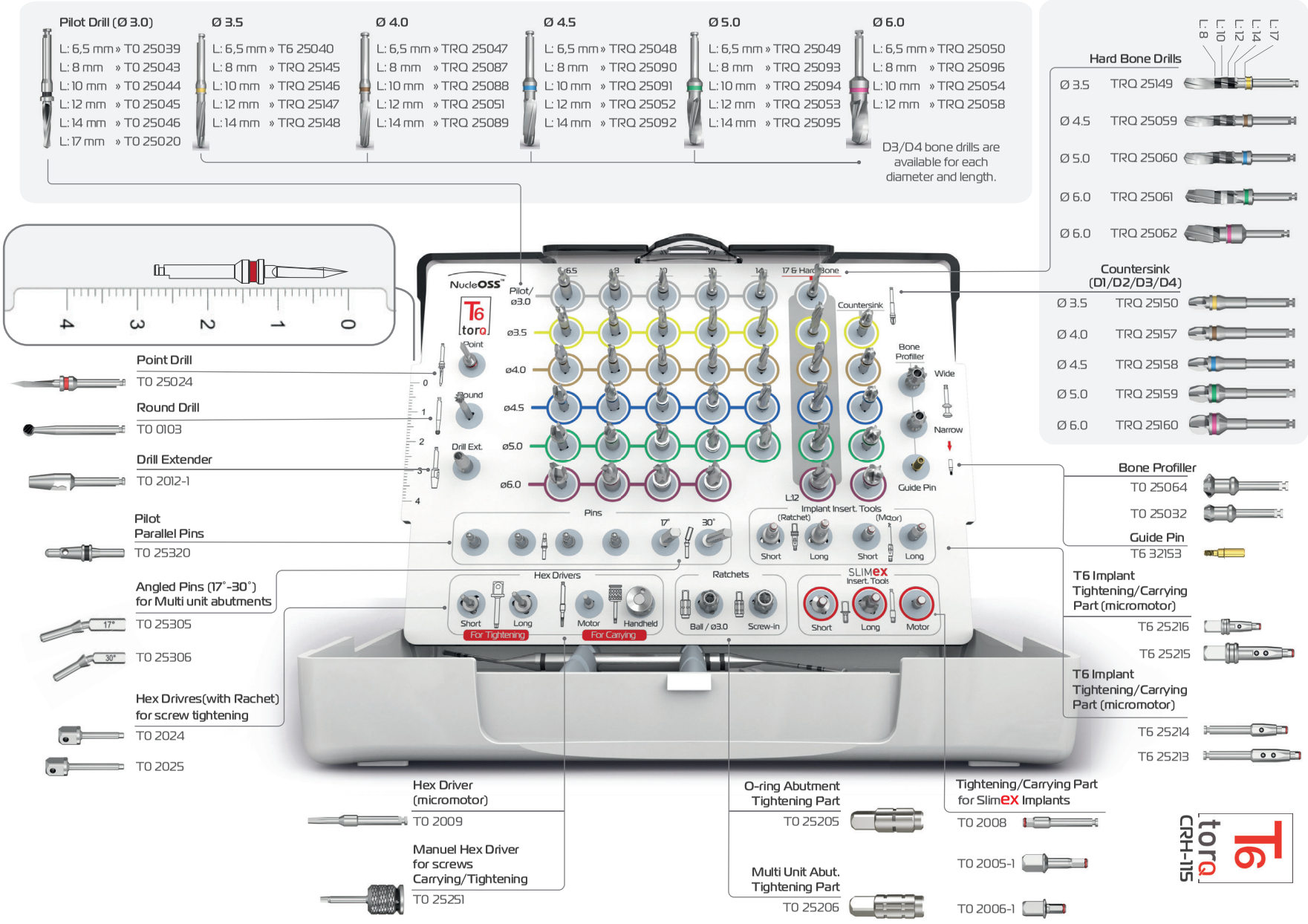
Pilot Drill (Ø 3.0)
L: 6,5 mm » T0 25039
L: 8 mm » T0 25043
L: 10 mm » T0 25044
L: 12 mm » T0 25045
L: 14 mm » T0 25046
L: 17 mm » T0 25020
Ø 3.5
L: 6,5 mm » T6 25040
L: 8 mm » TRQ 25145
L: 10 mm » TRQ 25146
L: 12 mm » TRQ 25147
L: 14 mm » TRQ 25148
Ø 4.0
L: 6,5 mm » TRQ 25047
L: 8 mm » TRQ 25087
L: 10 mm » TRQ 25088
L: 12 mm » TRQ 25051
L: 14 mm » TRQ 25089
Ø 4.5
L: 6,5 mm » TRQ 25048
L: 8 mm » TRQ 25090
L: 10 mm » TRQ 25091
L: 12 mm » TRQ 25052
L: 14 mm » TRQ 25092
Ø 5.0
L: 6,5 mm » TRQ 25049
L: 8 mm » TRQ 25093
L: 10 mm » TRQ 25094
L: 12 mm » TRQ 25053
L: 14 mm » TRQ 25095
Ø 6.0
L: 6,5 mm » TRQ 25050
L: 8 mm » TRQ 25096
L: 10 mm » TRQ 25054
L: 12 mm » TRQ 25058
D3/D4 bone drills are available for each diameter and length.
Hard Bone Drills
L: 8
L: 10
L: 12
L: 14
L: 17
Ø 3.5 TRQ 25149
Ø 4.5 TRQ 25059
Ø 5.0 TRQ 25060
Ø 6.0 TRQ 25061
Ø 6.0 TRQ 25062
Countersink (D1/D2/D3/D4)
Ø 3.5 TRQ 25150
Ø 4.0 TRQ 25157
Ø 4.5 TRQ 25158
Ø 5.0 TRQ 25159
Ø 6.0 TRQ 25160
Point Drill
T0 25024
Round Drill
T0 0103
Drill Extender
T0 2012-1
Pilot Parallel Pins
T0 25320
Angled Pins (17°-30°) for Multi unit abutments
17°
T0 25305
30°
T0 25306
Hex Drivres(with Rachet) for screw tightening
T0 2024
T0 2025
Hex Driver (micromotor)
T0 2009
Manuel Hex Driver for screws Carrying/Tightening
T0 25251
O-ring Abutment Tightening Part
T0 25205
Multi Unit Abut. Tightening Part
T0 25206
Tightening/Carrying Part for Slimex Implants
T0 2008
T0 2005-1
T0 2006-1
Bone Profiller
T0 25064
T0 25032
Guide Pin
T6 32153
T6 Implant Tightening/Carrying Part (micromotor)
T6 25216
T6 25215
T6 Implant Tightening/Carrying Part (micromotor)
T6 25214
T6 25213
NucleOSS
T6 toro
Pilot/ ø3.0
ø3.5
ø4.0
ø4.5
ø5.0
ø6.0
Point
Round
Drill Ext.
Pins
17°
30°
Hex Drivers
Short
Long
Motor
Handheld
For Tightening
For Carrying
Ratchets
Ball / ø3.0
Screw-in
Implant Insert. Tools
(Ratchet)
(Motor)
SLIMex Insert. Tools
Countersink
Bone Profiller
Wide
Narrow
Guide Pin
L:12
17 & Hard Bone
T6 toro CRH-115

Initials Drills

General Info

The parts in the T6 surgical sets are used with the micromotor or the NucleOSS ratchet or screwdriver in the surgical kits..

In addition, parts such as connecting screws placed on the implant, implant caps, healing caps or connecting screws placed on the abutment can also be used with the manual hex wrench included in the surgical kits.

Caution!
Drill must be correctly attached to the micromotor and should not be operated until

Round Drill - T0 0103

Point Drill - T0 25024

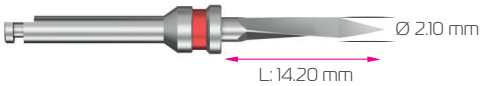

Drill Extender - T0 2012-1

Initial burs are used to prepare the cavity during osteotomy.

Round drill is used to make necessary corrections by filing at the beginning of the osteotomy if the bone surface in the area where the implant will be placed is damaged or irregular.

The point bur is used to determine the place where the implant will be placed on the bone and to allow the next bur to advance comfortably.

After the necessary corrections are made with the round bur, the milling is first started with the point bur according to the surgical protocol.

The bur extender is used to extend the bur lengths by approximately 16 mm in cases where the bur length is insufficient.

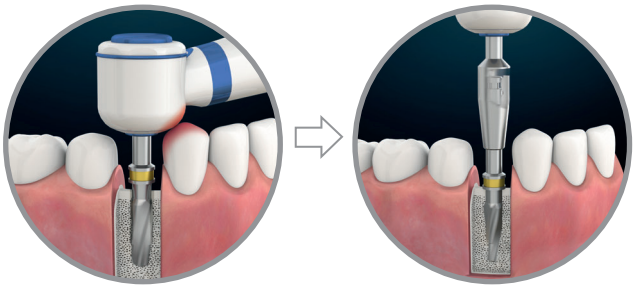

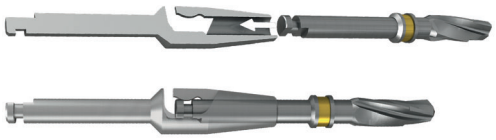

The distance is increased with drill extender in cases where the micromotor is not able to advance in the mesial or distal of the implant area.

Pilot and Final Drills

Pilot Drills (for Ø 3,0 mm implants)

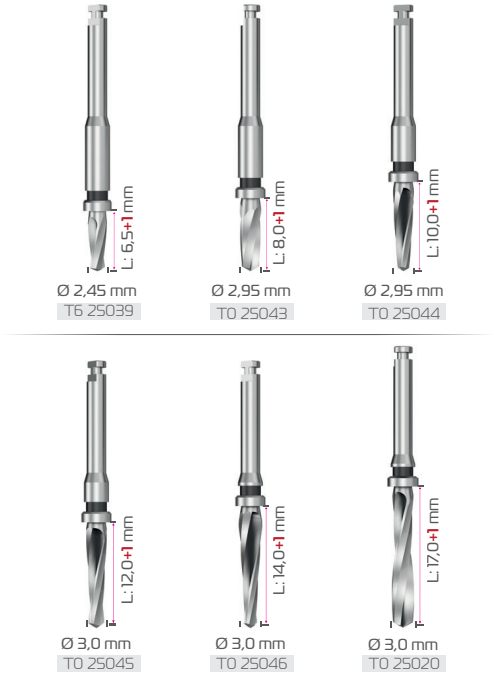

It is the first osteotomy bur that must be used after the initial drills in all surgical drilling protocols to open the implant cavity in the jawbone.

It is one of the parts that are available in both the T6 Standard implant and T6 TorQ implant surgical kits.

6It is available in six different sizes, 6.5, 8, 10, 12, 14 and 17 mm.

Drill diameters are as follows and are also used in the drill protocols of narrow implants.

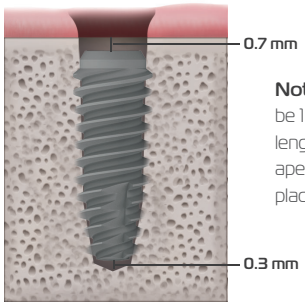

Note: All drill sizes are designed to be 1 mm longer than the implant length to avoid compression in the apex area, while the implants are placed 0.7 mm from the bone level.

T6 TorQ - Final Drills

Osteotomy burs are used to make a suitable cavity for placing implants in the bone.

Drills with stoppers are available in T6 surgical kits for all NucleOSS implant diameters and in five different length options (6.5 - 8 - 10 - 12 - 14 mm).

All drills are designed for use with a micromotor. All drills are color coded to indicate their diameter.

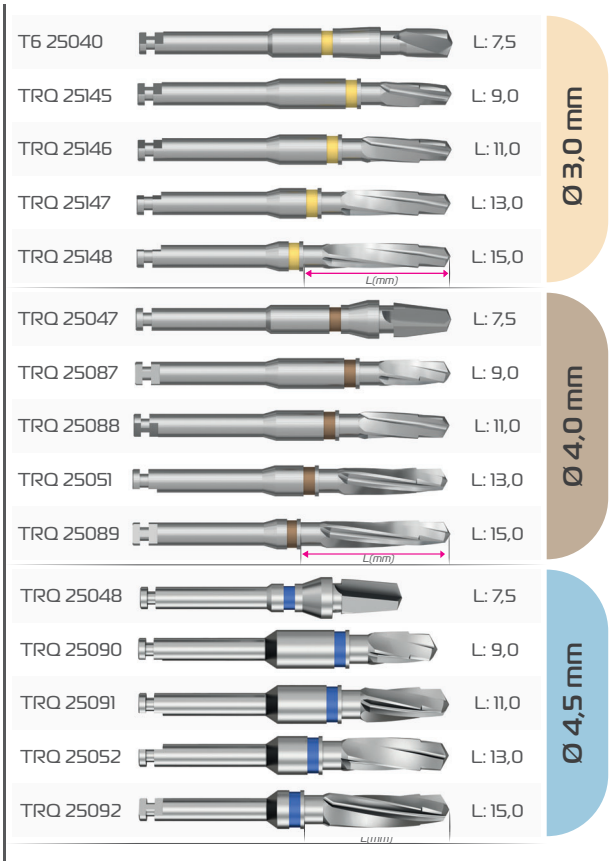

Hard Bone and Countersink Drills

Hard Bone Drills

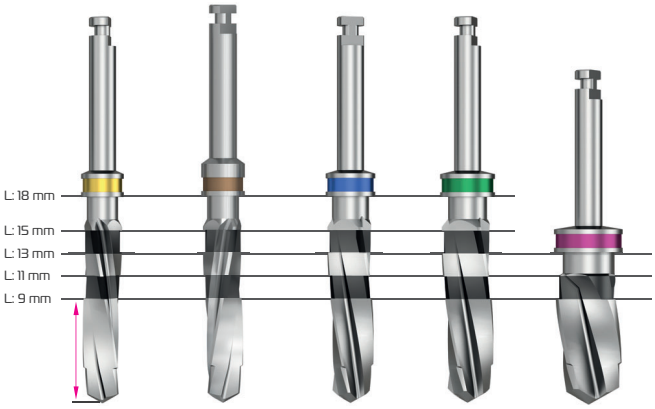

Ø 3,5	Ø 4,0	Ø 4,5	Ø 5,0	Ø 6,0
TRQ 25149	TRQ 25060	TRQ 25060	TRQ 25061	TRQ 25062

It is used after final burs in D1/D2 bone.

Hard bone drills widen the opened cavity by 0.2 mm, allowing the implant to advance more easily in the cavity and reducing the resulting stress.

Even if hard bone drills are used in D1/D2 type hard bones, a countersink should definitely be used afterwards. Otherwise, resorption may occur due to stress.

Drills are approximately 1 mm longer than the implant length.

Countersink Drills

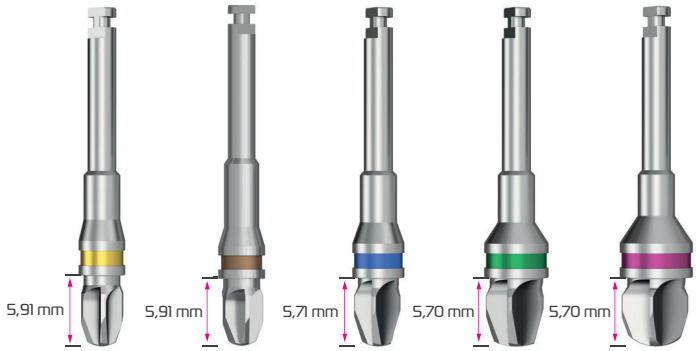

Ø 3,5	Ø 4,0	Ø 4,5	Ø 5,0	Ø 6,0
TRQ 25150	TRQ 25157	TRQ 25158	TRQ 25159	TRQ 25160

It is designed to prevent the implants from getting stuck in the neck area and to provide passive seating. It must be used to prevent/reduce stress-induced bone resorption in D1/D2/D3 type bones.

The T6 Surgical set includes three different diameter neck expanders compatible with all T6 NucleOSS implant diameters (Ø3.5 - 4.1 - 4.8 mm). All drills are designed for use with a micromotor.

T6 TorQ Implant - Drill Compatibility

Ø 3,5 Implant ve D2/D3/D4 Bone Drill

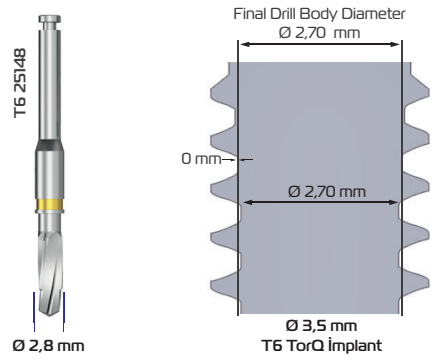

Ø 3,5 Implant and D1 Bone Drill

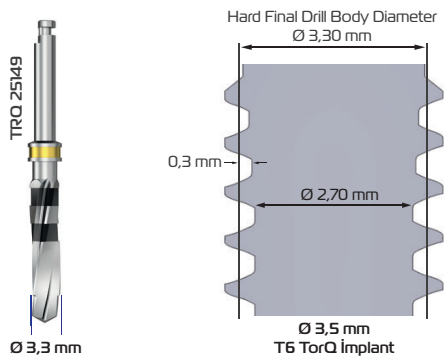

Ø 4,0 Implant ve D2/D3/D4 Bone Drill

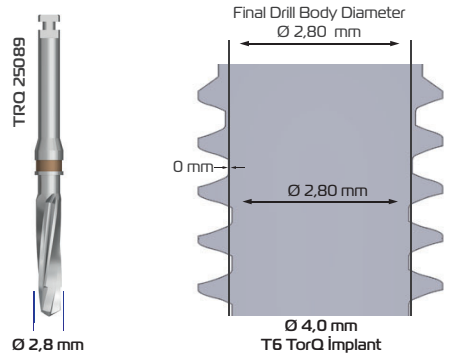

Ø 4,0 Implant and D1 Bone Drill

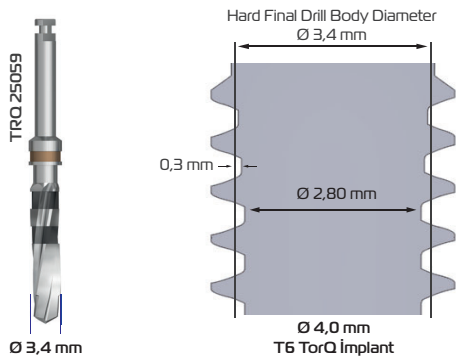

Ø 4,5 Implant ve D2/D3/D4 Bone Drill

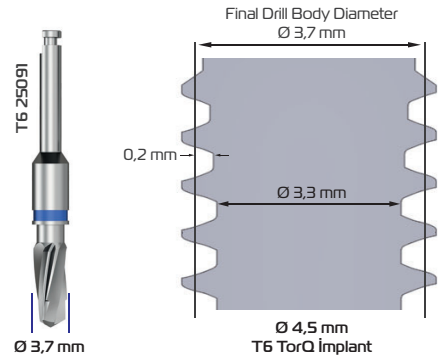

Ø 4,5 Implant and D1 Bone Drill

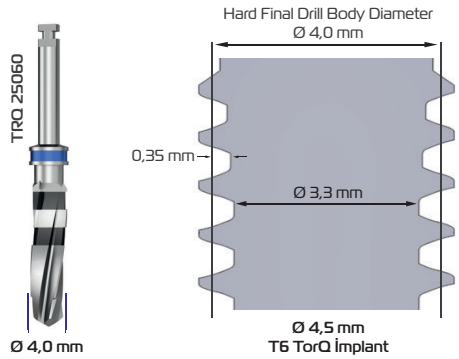

T6 TorQ Implant - Drill Compatibility

Ø 5,0 Implant ve D2/D3/D4 Bone Drill

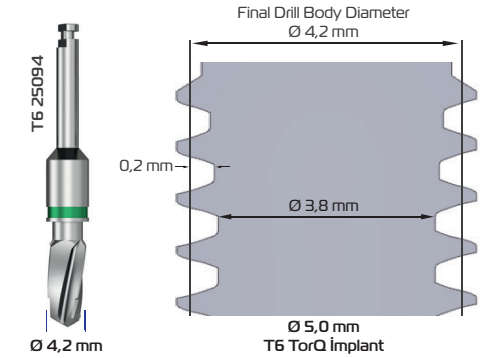

Ø 5,0 Implant and D1 Bone Drill

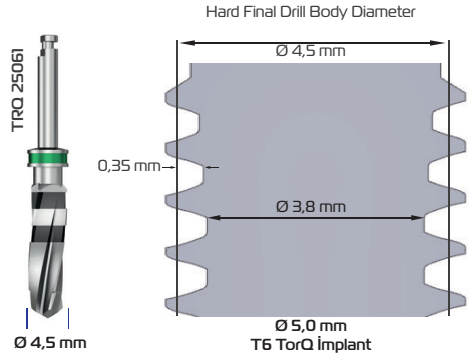

Ø 6,0 Implant ve D2/D3/D4 Bone Drill

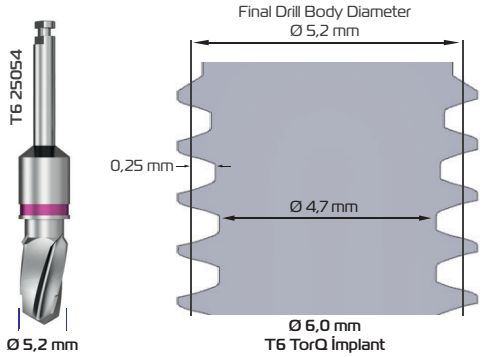

Ø 6,0 Implant and D1 Bone Drill

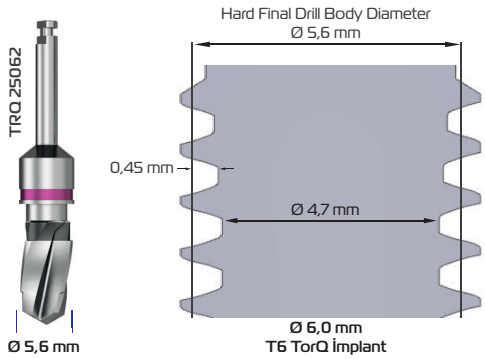

T6 TorQ Implant - Drill Compatibility (for L: 6.5 mm implants)

Ø 4,0 - L 6,5 Implant and D1/D2/D3/D4 bone Drill

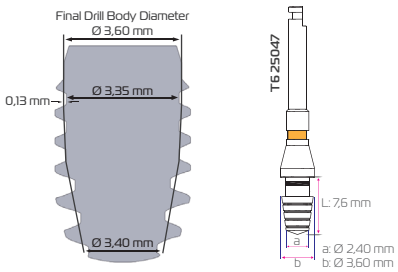

Ø 4,5 - L 6,5 Implant and D1/D2/D3/D4 bone Drill

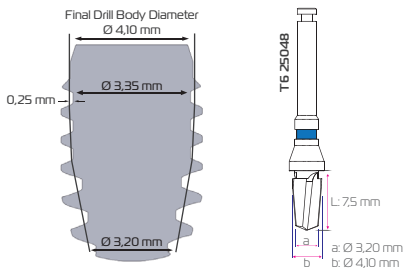

Ø 5,0 - L 6,5 Implant and D1/D2/D3/D4 bone Drill

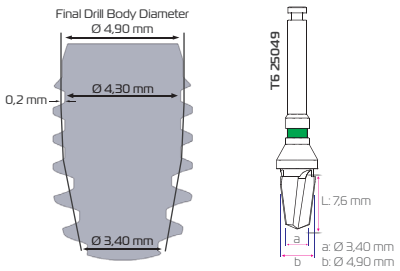

Ø 6,0 - L 6,5 Implant and D1/D2/D3/D4 bone Drill

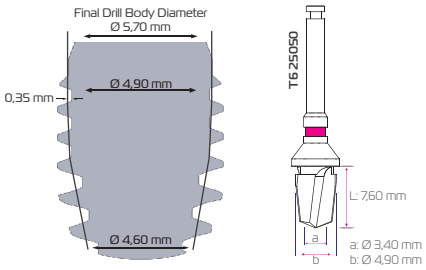

Pilot Parallel Pins

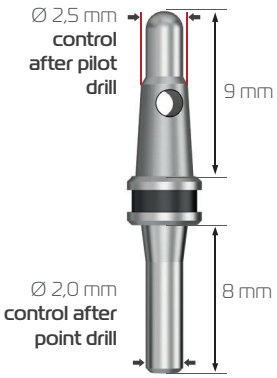

T0 25320

Parallel pins are used to control the parallelism with the adjacent teeth in single implant treatments, and to control the parallelism between the implant cavities during surgical intervention in multiple implant treatments

T6 surgical sets have four parallel pins.

The lower part of the parallel pin is Ø 2 mm and can be used after point drilling.

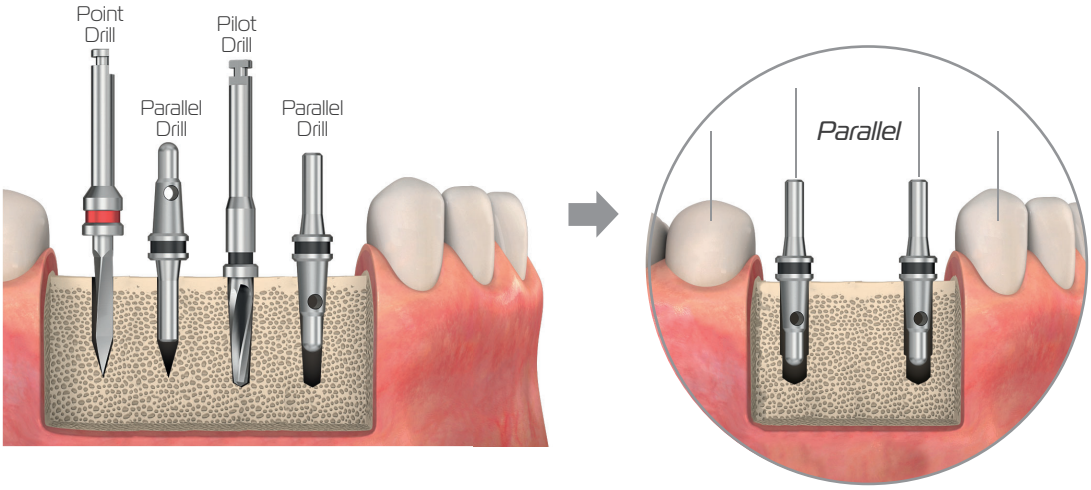

Angled Pins (17° - 30°)

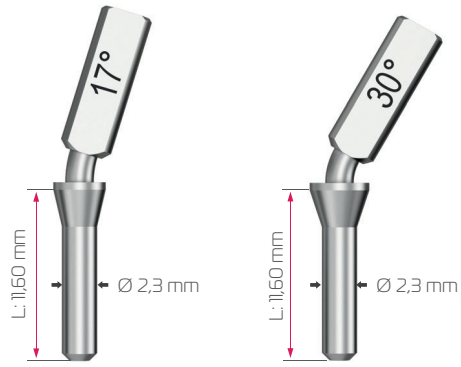

TO 25305 | TO 25306

There are two angled parallel pins, 17° and 30°.

It is used to check whether the cavity is opened at the right angle when placing the multi-unit abutments.

It is used after the pilot drill.

Using Angled Parallel Pins

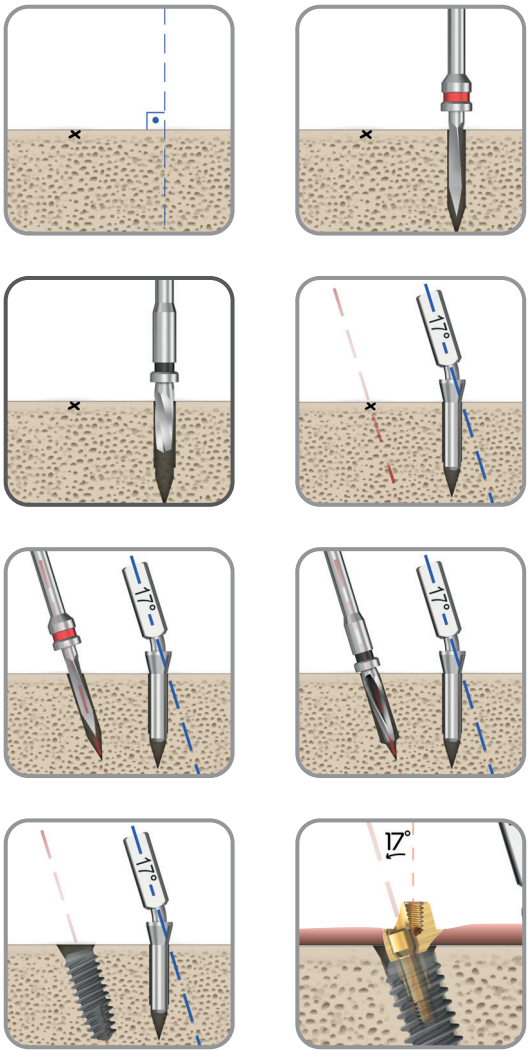

Before using the angled parallel pin, a 90° vertical reference slot is opened by using point > pilot(Ø 3.0mm) burs, respectively, near the point where the implant cavity is planned to be drilled.

The parallel pin (17°-30°) to be used is placed in the opened reference slot (cavity).

By referring to the parallel pin, starting with point > pilot (Ø 3.0mm) burs to, the slot is opened at the point where the implant will be placed in accordance with the drill protocol and the implant to be used is carefully placed in the slot.

The angled multi-unit abutment is placed on the implant in a way that the platform surface is parallel to the bone surface and attached to the implant with the M1.6 multi-unit connecting screw (16008).

In this way, using an angled parallel pin, the implant is placed in the bone at a right angle. In addition, the platform surface of the abutment placed on the implant is positioned correctly.

Bone Profiler Drill

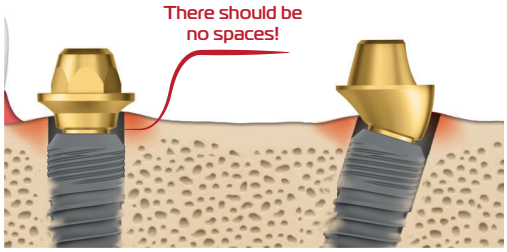

After T6 implants are placed in the implant socket(cavity) in the patient's jawbone, the uneven bone density in the neck area of the implant prevents the abutment from seating on the implant properly.

This may cause the abutment or the connecting screw to break in the short or long term.

To solve this problem, the bone profiler bur in surgical sets is used before the abutment is placed.

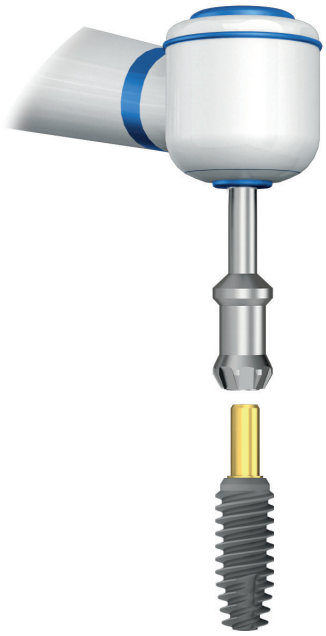

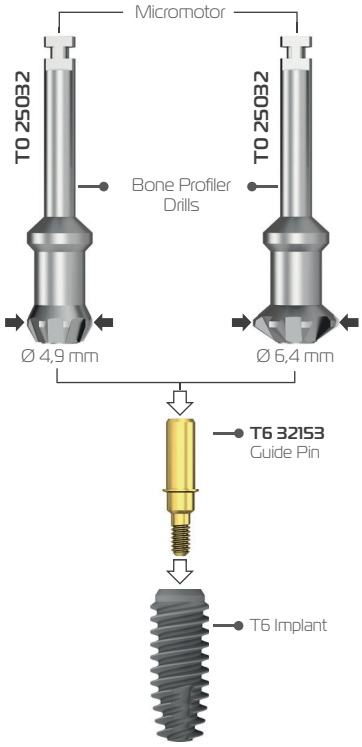

Using the Bone Profiler Drill

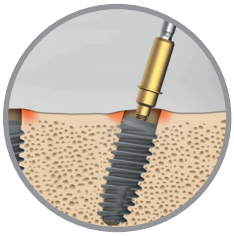

Before the abutment is placed, the guide pin is inserted into the implant with the help of a manual hex driver.

The uneven bone in the neck of the implant is cleaned by placing the drill (before starting the micromotor) on the guide pin.

Note: At this stage, while the bur is working, the bone surface should be cooled with water.

After the uneven bone is cleaned, the abutment to be used is checked by placing it on the implant.

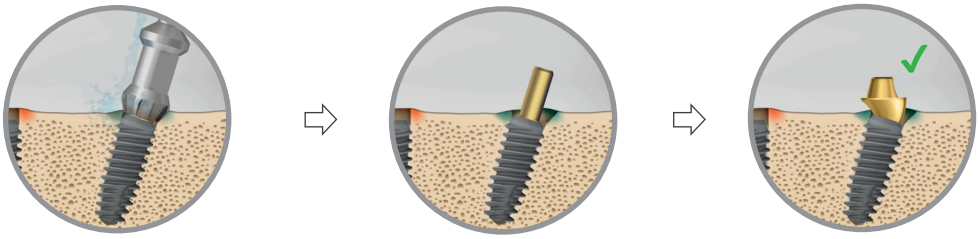

T6 Implant Transfer and Tightening Parts

One of the following T6 carrying/tightening parts is used to transfer the implant from the sterile tube to the surgical site and place the implant.

Ratchet, motor or screwdriver are used in implant carrying/tightening process.

The carrying-clamping piece must fit into the implant in the exact and correct position. Otherwise, the implant may fall or damage the hex structure of the implant, as the carrying part cannot provide sufficient contact.

Before implanting, it should be checked whether the red silicone on the insert tip is in place. If the silicone is lost or damaged, it should be replaced with the spare silicone supplied in the surgical set.

The T6 implant removed from the carrier should be placed in the implant socket opened according to the protocol in the patient's mouth as soon as possible without being touched anything.

While the T6 implant is placed with a micro motor at a maximum speed of 15 rpm or with a manual hex wrench, it is placed by being turned clockwise so that the upper surface of the implant is 0.7 mm below the bone level.

By applying pressure on the carrier/tightening part during insertion, the part should be prevented from coming out of the hex socket.

Contribution of the Position of the Implant in the Socket to the Impression Process

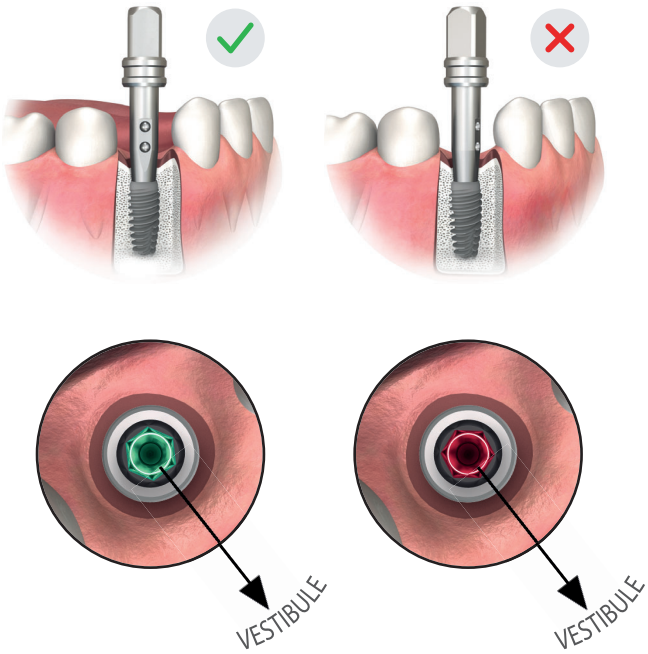

In order for standard abutments to be positioned correctly, the dots of the carrying and tightening part must face the vestibule direction of the teeth when placing T6 implants. Thus, the flat surface of the Hex structure will be in the vestibule direction of the teeth.

In addition, it is used to determine the angle direction in angled abutments. Implant hex direction is important because the hex flat surface faces the angle axis.

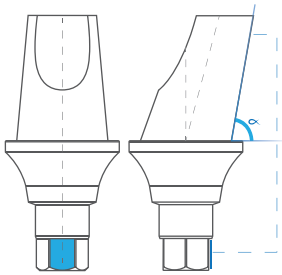

The angled axis point out the flat of Hex connection structure.

If the dots on the carrying and tightening parts are not taken into consideration, the Hex plane of the implant will face the mesial or distal direction of the teeth, and will cause the standard abutment to be positioned incorrectly.

Hex Drivers

Hex Driver - Transfer

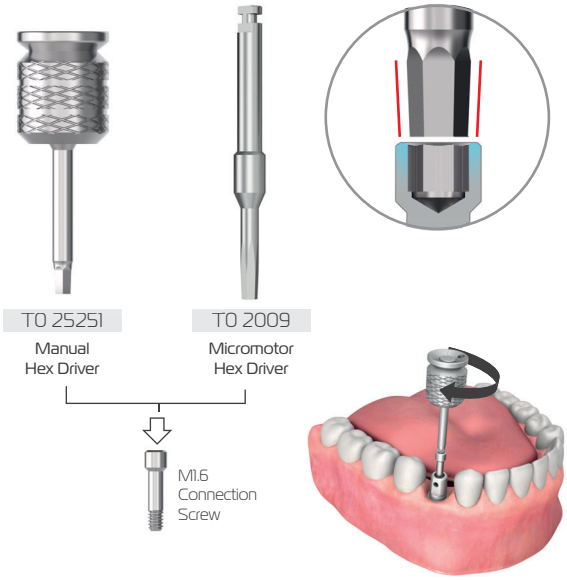

Hex wrench is used for fixing healing components, prosthetic and impression parts.

It is made of stainless-steel material.

It can be procured in a surgical set and in one piece.

The tip of the hex wrenches used manually and with micromotor is in hex structure and conical shape.

It can be used for carrying connecting screws and healing caps and for light tightening.

Torque up to a maximum of 10 Ncm can be made with these hex driver.

Note: Final torque must never be done. Because the hex slot of the screw or the tip of the hex wrench may be damaged.

Hex Driver (torque)

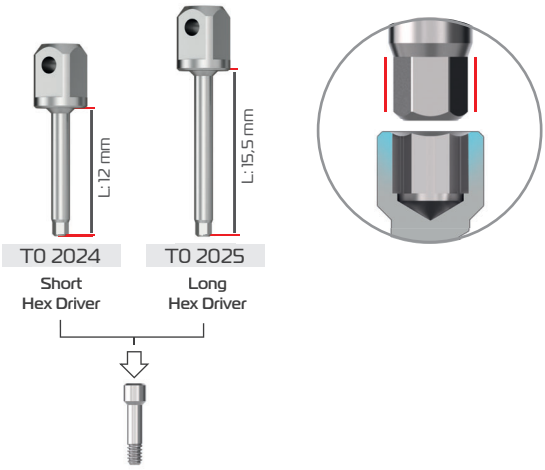

The screw is held with a hex wrench and placed on the part it will be fixed to. The hex driver is gently turn clockwise to tighten the screw.

Tightening drivers are used for fixing healing components, prosthesis and impression parts.

It is used with a ratchet

It is made of stainless-steel material.

It can be procured in a surgical set and in one piece

The tip of the hex wrenches used for final torque is straight. It is only used for torque with NucleOSS ratchet. It has no retention, it is not used for carrying.

The ratchet is carefully seated on the hex driver.

The screw is tightened by turning the ratchet clockwise. By following the torque values specified at the end point, the desired torque value is set and the tightening process is completed.

Ball(O-ring) and Screw-Retained Tightening Parts

O-Ring Abutment Tightening Part (ball)

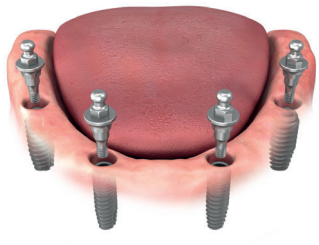

T0 25205

O-Ring abutment tightening part is used to place ball abutments on a T6 implant.

They are made of stainless steel.

It can be used with a ratchet or screwdriver.

The ball abutment is carefully inserted into the body. The ball abutment tightening part (T0 25205) is used to fix the abutment to the body.

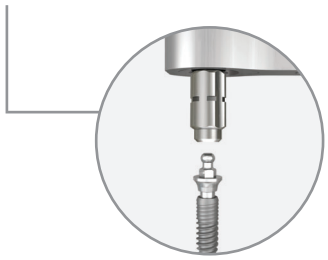

Ball abutment should be torqued to a maximum of 30 Ncm using the NucleOSS ratchet.

Screw-Retained Tightening Part

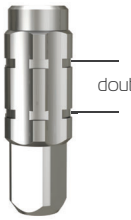

T0 25206

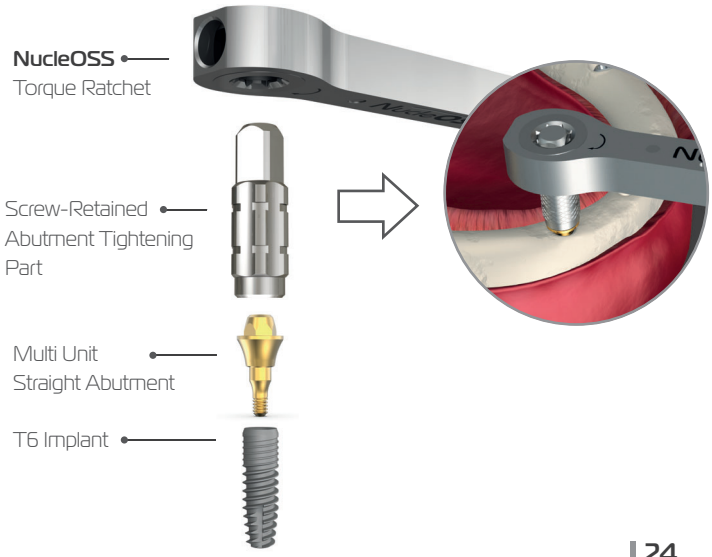

Threaded abutment tightening part is used to place multi-unit straight abutments on T6 implants.

It is made of stainless steel.

It can be used with a ratchet or screwdriver.

Multi-unit straight abutment has a threaded connection structure. When placing the abutment on the implant, attention should be paid to the tightening and torque values.

Caution!
Multi-unit straight abutment should be torqued to a maximum of 30 Ncm when being placed on the abutment!

If the torque value is less or more than the specified value, loosening or breakage of the abutment may occur.

Multi-unit angled abutment is carefully placed on the implant by holding the carrying part and fixed to the implant with the Connecting screw included in the package. The connecting screw should be torqued to a maximum of 30 Ncm with the help of a NucleOSS torque ratchet.

Slimex Implant Carrying/Tightening Parts

TO 2008

with micromotor

TO 2005-1

with ratchet / long

TO 2006-1

with ratchet / short

Parts of T6 Standard and T6 TorQ surgical sets are used in **slimex** implant surgery and prosthetic stages.

The red silicone ring on the ends of the carrying/Tightening parts prevents the implant from falling during transport.

Therefore, before using, make sure that the red silicone ring is in its place and undamaged.

Ratchet

Screwdriver

Micromotor

Slimex Transfer/Tightening parts are included in T6 surgical kits.

CRH-109

T6 Standard Surgical Kit

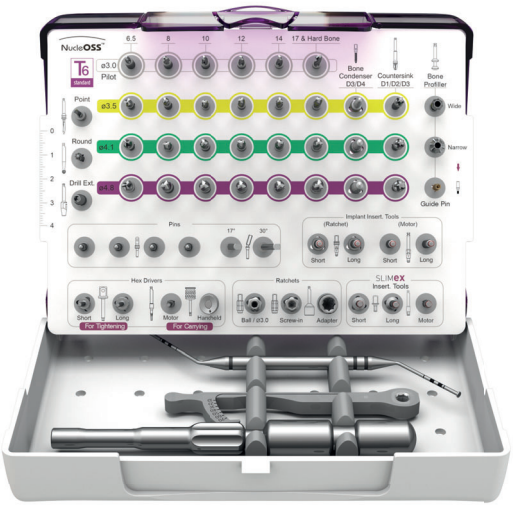

CRH-115

T6 Torq Surgical Kit

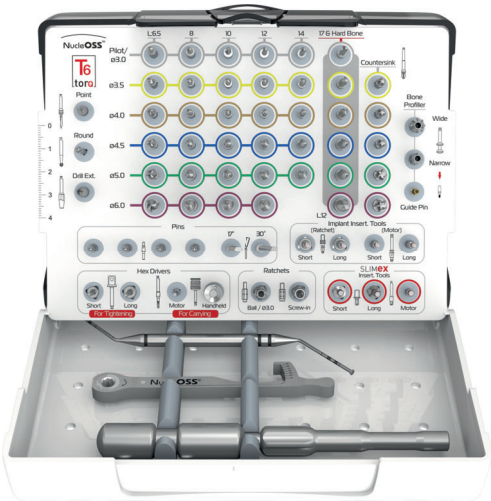

Depth Gauge - Screw Driver - Ratchet

Depth Gauge - T0 25312

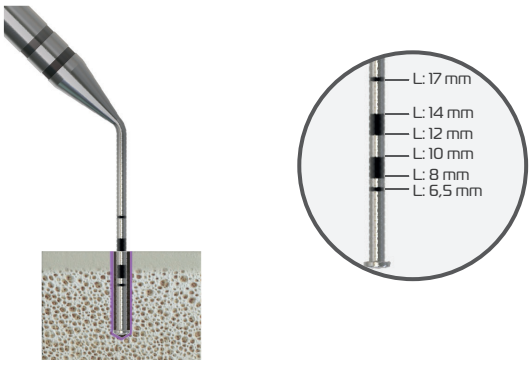

It is one of the items that are included in both the T6 Standard and T6 TorQ surgical kits.

In order to be sure of the depth of the opened slot(cavity), a control should be performed using a depth gauge.

It is one of the items that are included in both the T6 Standard and T6 TorQ surgical sets.

Screwdriver - T0 2022

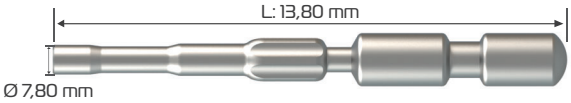

It is offered as an alternative to the NucleOSS ratchet for the use of implant carrying/tightening parts, Hex wrenches, threaded abutment tightening part, ball and equator tightening parts.

Compatible with square head parts.

Torque Ratchet - T0 25900

The torque value of the NucleOSS ratchet is from 0 Ncm to 70 Ncm.

When the needle is at the top, it shows about 80 Ncm.

The ratchet is used by NucleOSS to tighten all the abutments and screws at the torque values specified in the product catalogs.

It is made of stainless-steel material.

It can be procured in a surgical set and in one piece.

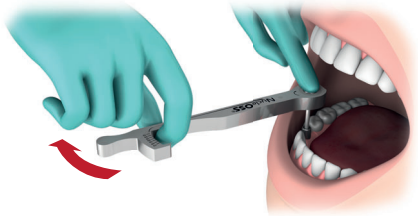

Using as Torqueless Ratchet;

Hold the torque arm and torque needle together. Press down on the wheel with your finger to hold the ratchet in place.

Caution! Direction arrow should point to the top during tightening and to the bottom during untightening.

Using as Torque Ratchet:

Press down on the wheel with your finger to hold the ratchet in place. Then pull the torque arm lightly in the direction of the arrow until you reach the desired torque value.

Caution! The torque arm should not be turned more than the torque values specified on the ratchet. Otherwise, the torque will be incorrect. Direction arrow should point to the top during tightening and to the bottom during untightening

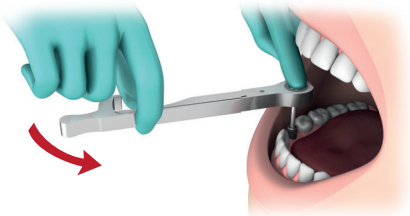

Using Ratchet for Removal:

Use the ratchet with the direction arrow facing down.

Tightening - Torque Values

T0 25900

Products	Tightening Parts	Torque Value
Implant cover screw and sinus caps	T6 2024 Short (with ratchet) T6 2025 Long (with ratchet) T0 25251 Manual Hex Driver	MANUAL/ Ratchet (If a racquet is used, 10 Ncm)
Gingiva Former		
Connection Screws of Peek Parts		
All Cemented Abutment Screws	T6 2024 Short (with ratchet) T6 2025 Long (with ratchet) **T0 25251** Manual Hex Driver	Max. 30 Ncm
Cast Abutment Screws		
Cad/Cam Ti-Base Abutment Screws		

Tightening - Torque Values

T0 25900

Product	Tightening Parts	Torque Value
Ball Abutment	T0 25205 O-ring Abutment Tightening Part	Max. 30 Ncm
Equator Abutment	774CHE Equator Abutment Tightening Part	Max. 30 Ncm
Multi Unit Straight Abutments	T0 25206 Screw-retained Abutment Tightening Part	Max. 30 Ncm
Multi Unit Angled (17º / 30º) Abutment Screws	T6 2024 Short (ratchet) T6 2025 Long (ratchet)	Max. 30 Ncm
Parts Installed on the Multi Unit	T0 25251 Manual Hex Driver	Max. 10 Ncm
Occlusal Screws Attached to Prosthesis 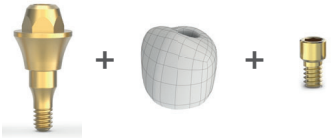		Max. 20 Ncm

NucleOSS Dental Implant System - Implant Prospectus

Definitions
NucleOSS Dental Implants (T1, T3, Tpure, T5 Short, T6, T6 TorQ and Slimex) are medical devices that intended to be surgically placed in the bone of maxillary and/or mandibular arches to support prosthetic restorations for restoration of the patients' chewing function. The implants are manufactured out ISO 5832-2 pure titanium Grade 4 to fulfill the requirements of 93/42/EEC medical devices directive.

NucleOSS Dental Implant is recommended for delayed loading after 12 weeks. NucleOSS Implants are non-pyrogenik. Implants are provided as sterile in a hermetic tube with a blister package and are for single use. Do not sterilize again.

Surface Specification
All NucleOSS Dental Implants have max①cell® surface. The surface is sand blasted and processed in acid baths. Following its special cleaning steps, the surface gains its hydrophilicity.

Patient Information
Surgery site must be clean before and after operation. The patient must be well informed about cleaning of the surgical area. The implant site should not be exposed with pressure due to chewing function. For a more detailed explanation please refer to Patient Information Broschure (D05.001/en).

Packaging
NucleOSS Dental Implants are protected with double barrier system as primary packaging (tube) and secondary packaging (blister). Implants are placed in blister package and are sterilized; and delivered to final packaging process as sterilizied.

Labelling
NucleOSS Dental Implants are provided with tube label, tyvek label and box label. These labels enables to control the lot number in three different stage. The diameter label that is present on the tube states the diameter and length of the implant. Diameter labels are color coded for different diameters.

Sterilization
NucleOSS Dental Implants are provided as sterile. Implants are sterile washed under Class 10.000 and packed under Class 100 clean room technology. Implants are placed in hermetically sealed tubes and sterilizied by 25-40 kGy of gamma irradiation. Gamma sterilization is protected until the best before if the packaging is not harmed. The proper storage conditions that is present on the package are 18-28^0 and %40-%60 moisture must taken seriously to protect sterilization.

⚠ **Cautions**
- NucleOSS Dental İmplant System products are produced by Şanlılar Med. Kim. San. Tic. Ltd. Şti.. Brand usage and sale of the products can be conducted only by Şanlılar and partner firms.
- NucleOSS Dental Implant system models (T1, T3, Tpure, T5 Short, T6, T6 TorQ and Slimex) should apply accordingly with NucleOSS Surgical and Prosthesis Surgical Protocols. It is adviced to wait at least 3 months (12 weeks) for osseointegration after surgery.
- Implants are in sterile packaging.
- Do not open the tube cover before use under any circumstances. Do not use the implant tubes that is opened or became deformed.
- Keep it away from the child reach.
- İf the impression and transfer part is present inside the implant package, this part might broken in case of using it as tightening part. Tightening must be actualizied with tightening part.
- It is important to decide on the implant that is suitable as diameter and lenght for implementation site. Adviced implementation sites are present in the relevant product catalogs. Please refer to the relevant catalogs for further information (for T6 D01.001/en; for Tpure D01.002/en; for T3 D01.003/en; for T1 D01.004/en; for T6 TorQ D01.005/en; for Slimex D01.006/en and for T5 short D01.007/en document numbered.)
- Apply adequate number of implants with suitable diameters in an axis with compatible with the dentition.
- Use the proper drill compatible with diameter and lenght.
- Inform the patient before and after surgery.
- Adequate general state of health of the patient is necessary.
- Implant tube must removed from the blister to sterile laboratory cloth by wearing handgloves.
- Implants with broken protection ring or harmed package must not be used.
- To avoid the risk of contamination, the implant must insert to the bed in the moment of taking it out of the sterile tube without touching it or contacting anywhere.
- Bone development of the patient must be considered for the implant treatment.

Storage Conditions
Devices should be stored at 18^{0}C - 28^{0}C temperature range and 40% - 60%

Caution ! Previously used implants cannot be used again. Use only the NucleOSS Dental System components and surgical kits. Manufacturer will not take responsibility in case of using the parts other systems.

Caution ! If the tube consists of which is also colored accordingly with its platform diameters, must transfer on implant by hex driver and handtight to cover the implant. Otherwise, the tissue might fill the implant and create risk factor.

Traceability
A Lot number is written in each package. Also, each package contains three Lot number sticker, In order to trace back the product, this Lot number stickers must be attached to the patient's file and panoramic x-ray.

Indications
NucleOSS Dental Implants (T1, T3, Tpure, T5 Short, T6, T6 TorQ nad Slimex) are medical devices that intended to be surgically placed in the bone of maxillary and/or mandibular arches to support prosthetic restorations for restoration of the patient's chewing function.

Contraindications
Hypertension, cordiovascular diseases, diabetes bone metabolism disturbances, uncontrolled bleeding disorders, inadequate wound healing capacity, inadequate oral hygiene, serious internal medical problems,maxiallary and mandibular growth not completed, poor general state of health, uncooperative and unmotivated patient, drug/alcohol/tobacco abuse, psychoses, long term treatment resistant functional disorders, xerostomia, granulocytopenia, Ehlers Danlos syndrome, radiation theraphy, osteoradionecrosis, weak immune system, kidney failure, organ transplantation, fibrous dysplasia, crohn disease, use of steroids, corticosteroids or anticonvulsant usage, prophylactic antibiotics, creatinin, serum calsium, titanium allergy, uncontrolled endocrine disorders, anticoagulation medicines, hemorrhagic diathesis, bruxism, parafunctional habits, unfavorable anatomic bone condition, uncontrolled periodontitis, temporomandibular joint disorders, treatable pathologic of jaw, changes in the oral mucosa, pregnancy, breast-feeding, osteoporotic crush fracture, respiratory disease, tyhroid or paratyhroid diseases. Active osteolytic patients, inflammatory, diagnosed malignancy, modular enlargements, tenderness, the patients with unexplained lump in the neck or head, infectious process in the implanting site, unrealistic patient expectations, unattainable prosthodontics reconstruction, lack of adequate training of pyhsician.

Risks
The risks may include inadverting perforation of the nasal and maxillary sinus, local and systemic infections, perforation the soft tissue, nerve damage, temporary bumps and pain due to implantation, speech problems nad gingivitis.

Nerve, local or systemic bacterial infections and inactive endocarditits in susceptible individuals are included as the long term problems. Inaccurate implantation migh risk the present dental axis.

Surgical Guide
Do not instert the implant in high torque or speed (15 rpm). If it feels any difficulty, the practician must step back, extract the implant and check for the implant bed and drills.

⚠ MRI Safety Information
Non-clinical testings demonstrated that the NucleOSS Dental Implant System is MR Conditional. A patient with this device can be scanned safetly, immediately after placement in an MR system meeting the following condtions:

- Static magnetic field of 1.5 T and 3.0 T
- Maximum spatial field gradient of 4,000 -gauss/cm (40 T/m)
- Maximum MR system reported, whole body averaged specific absorption rate (SAR) 2 W/kg (Normal Operating Mode)

Under the scan conditions defined above, the NucleOSS Dental Implant System is expected to produce a maximum temprature rise of less that 1.7^0 after 15 minutes of continuous scanning. In non-clinical testing, the image artifact caused by the device extends approximately 5 mm from the implant when imaged with a gradient echo pulse sequence and a 3.0 MRI system.

Superstructures
NucleOSS Dental Implant System offers dentists a rich abutment options that can be used for all bodies with different purposes. These are defined as cemented solutions, screw-in solutions, custom solutions, overdenture solutions, cad-cam solutions and scannig bodies, auxiliary prothetic parts, temporary parts. The product compability according to platform diameter and lenght of abutments can be seen in relevant catalogs of the products.

Abutments are only suitable for the bodies of NucleOSS Dental Implant System. The failure that is caused by using with other system might hurt the patient.

All Abutment belong to NucleOSS Dental Implant System are produced out ISO 5832-3 Grade-5 Titanium and ISO 5832-12 Cobalt-Chromium alloy and non-sterile and presented for sale. The must sterilize by the last user.

Sterilization
Titanium superstructures recommended sterilization condition as fllows;

Method	Moist heat sterilization according to ISO 17665
Cycle	Pre vacuum
Temperature	132^0 C / 270^0 F
Exposure time	4 minutes
Pressure	2.2 Bar
Pre-vacuum	3 times < 60 mbar
Minimum drying time	30 minutes in chamber

- Do not storage the products after sterilization.
- Minimum validated sterilization time and temprature required to achieve a -10^{-6} sterility assurance level.

Note: Sterilization parameters and methods shown are validated by NucleOSS Dental Implants. According to EN ISO 17665, the final resposibility for validation of sterilization rechniques and equipment lies directly with the practician. All autoclaves/sterilizers should be validated and maintained in accordance with EN ISO 17665-1.

Indications
NucleOSS abutments and prosthetic parts are intended for use with NucleOSS Dental Implant in the maxillar and mandibular arches to privde and support for crowns, bridges or overdentures for edentulous or partially edentulous cases.

Contraindications
Allergy may be developed to submaterials of the superstructures. Titanium, Gr-5 titanium alloy (titanium-aluminium-vanadium), PEEK (Polietheretherketone), POM (Polyoxymethylen), ISO 5832-12 raw material CoCr alloy allergies must be considered.

⚠ Cautions
In case of not considering the cautions below, complications may occur as parts slipping into trachea or getting swallowed.

For dental technicians:
Make sure to protect the parts of abutments that goes inside the implant or this process must complete while abutment is connected to analog.

Abutment must be placed on the model by controling if its in the right direction and must make sure that it fits perfectly. Abutment must be stabilized by abutment screw and hadtight only (max. 10 Ncm). After this point, the accurate prosthesis fir the treatment must be formed and extracted from the model by proper hex driver.

For dental professionals:
Clinician takes the abutments comes from the laboratory, and takes the temporary restorations, cover screws or gingiva formers out of the patient's mouth. After cleaning, disinfecting and sterilizing the prosthesis parts coming from the laboratory, the application must be followed as the given appropriate torque values.

- In case of tightening abutments more or less than the adviced torque values, abutment or implant might fail.
  See below for recomended torque values;

Torque Values for NucleOSS Parts

All Covers and Gingiva Formers	Hand/Ratchet (10 Ncm)
All Cemented Abutment Screws	Max. 30 Ncm
Temporary (PEEK) Parts and Screws	10 Ncm
Multi Unit Abutments	Max. 30 Ncm
Abutment Occlusional Screw	20 Ncm
All Cap Screws	10 Ncm
All Universal Casting Abutment Screws	Max. 30 Ncm
Ball Abutments	Max. 30 Ncm
Equator® Abutments	Max. 30 Ncm
CAD-CAM Ti-Base Abutment Screws	Max. 30 Ncm

Caution: Products must be used right after sterilization. Sterilization conditions are given above.

Covering the Screw Channel:
Before inserting the crown on abutment, abutment screw channel must be covered with sealing component (teflon). This process enables to take the abutment out if that is nedeed afterwards.

Adjustment to the Patient's Anatomy:
PEEK, Titanium or Titanium Alloy abutments may shortened untill the top level of the connection screw, if needed to adjust to the patient's anatomy.

CoCr Castable Abutment Cautions:
CoCr raw material must comply with ISO 5832-12 standard.
The molten metal temperature should not exceed 1420 ^{0}C to avoid the melting of CoCr Casting Abutment.

CoCr Coefficient of Thermal Expansion (CTE) (a):
- For 20 - 100°C, 13.2 (10-6 K-1)
- For 20 - 200°C, 13.3 (10-6 K-1)
- For 20 - 300°C, 13.5 (10-6 K-1)
- For 20 - 400°C, 13.8 (10-6 K-1).

Gingiva height should not exceed 5.0 mm and abutment angle should not exceed 25^{0}.

Caution! Temporary abutments should not stay in patients' mouth more than exposure time. Exposure time for temporary abutment (Ti, PEEK) is 180 days.

-Şanlılar Tıbbi Cihazlar Med. Kim. San. Tic. Ltd. Şti. consistently gives trainings. While preparing this prospectus, it is assumed that the clinician participates in these trainings and have prior knowledge to the practise. For further information please refer to surgical manuals (for T6 D03.001/en, for Tpure D03.002/en, for T3 D03.003/en, for T1 D03.004/en, for T6 TorQ D03.005/en, for Slimex D03.006/en and for T5 Short D03.007/en document numbered) and surgical instruments instructions for use (D02.002 document numbered).

Any serious incident related to the medical device should be reported to the manufacturer and the local authority.

If the storage conditions connot be met, the product should not be used.

Warning Signs

REF Catalog number	Consult operating instructions	MD Medical Device
LOT Lot number	Use before expiry date	Country of Manufacturer
For single use only	Manufacturer	UDI Unique Device Indetifer
STERILE R Sterile by gamma irradiation (for implant)	Rxonly For prescription use only	# Model number
Do not use if package is damaged	MR MRI Safety Information	Do not sterilize (for implant)
Temperature limit	Cautions	
Humidity limit	NON STERILE Non Sterile (For Abutment)	
EC REP Authorised Representative	Double Sterile Barrier System	

NucleOSS™

SANLILAR

Şanlılar Tıbbi Cihazlar Medikal Kimya San. Tic. Ltd. Şti.
İTOB Organize Sanayi Bölgesi 9. Sk. No:24 D:26, 35865 Menderes / İzmir / Türkiye
T: 90 232 799 03 04 (pbx) F: +90 232 799 03 06
www.NucleOSS.com

CE 2195

EC REP Nucleoss Europe GmbH
Graben 17, 64646 Heppenheim (Bergstr.)
GERMANY

Notes

Notes

Notes

Notes

NucleOSS™

Şanlılar Tıbbi Cihazlar
Medikal Kimya San.
Tic. Ltd. Şti

10018 Sk. No:7 İTOB Organize
Sanayi Bölgesi 35477,
Tekeli - Menderes - İZMİR

T +90 232 799 03 04
F +90 232 799 03 06
E info@nucleoss.com

NucleOSS Europe GmbH
Graben 17
64646 Heppenheim / Germany

T +49 (0) 6252 795 7772
F +49 (0) 6252 795 7773
E europe@nucleoss.com